Single group output with PFC function RSP-500



DIMENSION：230*127*40.5mm

Features:

- Universal AC input/Full range
- With active PFC function, PFC > 0.95
- Protections: Short circuit/Overload/Over voltage/Over temperature
- There is a DC fan for strong wind cooling
- It can work continuously for 43000 hours at 25 ℃
- 100% full load burn-in test
- Efficiency up to 90%
- 3-year quality assurance (two replacement per year, free maintenance for two years)

SPECIFICATION

ISO9001:4008

MODLE		RSP-500-12	RSP-500-15	RSP-500-24	RSP-500-27	RSP-500-48
OUTPUT	DC VOLTAGE	12V	15V	24V	27V	48V
	RATED CURRENT	41.7A	33.4A	21A	18.6A	10.5A
	CURRENT RANGE	0 ~ 41.7A	0 ~ 33.4A	0 ~ 21A	0 ~ 18.6A	0 ~ 10.5A
	RATED POWER	500.4W	501W	504W	502.2W	504W
	RIPPLE & NOISE(max) Note.2	150mVp-p	150mVp-p	150mVp-p	150mVp-p	150mVp-p
	VOLTAGE ADJ. RANGE	10~13.2V	13.5~18V	20 ~ 26.4V	26~30V	41 ~ 56V
	VOLTAGE TOLERANCE Note.3	±1.0%	±1.0%	±1.0%	±1.0%	±1.0%
	LINE REGULATION	±0.3%	±0.3%	±0.2%	±0.2%	±0.2%
	LOAD REGULATION	±0.5%	±0.5%	±0.5%	±0.5%	±0.5%
	SETUP, RISE TIME	1500ms, 80ms/230VAC 3000ms, 80ms/115VAC(at full load)				
	HOLD UP TIME (Typ.)	18ms/230VAC 14ms /115VAC (at full load)				
INPUT	VOLTAGE RANGE Note.4	88 ~ 264VAC 124 ~ 370VDC				
	FREQUENCY RANGE	47 ~ 63Hz				
	POWER FACTOR (Typ.)	PF>0.95/230VAC PF>0.98/115VAC(at full load)				
	EFFICIENCY (Typ.)	88%	88%	89%	89.5%	90.5%
	AC CURRENT (Typ.)	6A/115VAC 3A/230VAC				
	INRUSH CURRENT (Typ.)	20A/115VAC 40A/230VAC				
	LEAKAGE CURRENT	<2.5mA / 240VAC				
PROTECTION	OVERLOAD	105 ~ 130% rated output power				
		Protection type : Hiccup mode, recover automatically after fault condition is removed				
	OVER VOLTAGE	13.8 ~ 16.2V	18.8 ~ 21.8V	27.6 ~ 32.4V	32.9 ~ 38.3V	58.4 ~ 68V
		Protection type : Shut down o/p voltage, re-power on to recover				
	OVER TEMPERATURE	Shut down o/p voltage, recovers automatically after temperature goes down				
FUNCTION	REMOTE CONTROL	POWER ON:open or 0~0.8VDC between RC+(Pin 4)&RC-(Pin3) on CN100				
		POWER OFF: 4~10VDC between RC+(Pin 4)&RC-(Pin3) on CN100				
	REMOTE SENSE	Compensate voltage drop on the load wiring up to 0.3V				
	FAN CONTROL (Typ.)	RTH2≧50℃±10℃Fan on ; RTH2≦40℃±10℃ Fan off (Fan always on for 3.3~5V,Fan ON/OFF control for 12~48V)				
ENVIRONMENT	WORKING TEMP.	-30 ~ +70℃ (Refer to "Derating Curve")				
	WORKING HUMIDITY	20 ~ 90% RH non-condensing				
	STORAGE TEMP., HUMIDITY	-40 ~ +85℃, 10 ~ 95% RH				
	TEMP. COEFFICIENT	±0.03%/℃ (0 ~ 50℃)				
	VIBRATION	10 ~ 500Hz, 2G 10 min./ 1cycle, 60 min. each along X, Y, Z axes				
SAFETY & EMC (Note.5)	SAFETY STANDARDS	Compliance to GB4943.1, EN 60950.1				
	WITHSTAND RESISTANCE	I/P-O/P:2KVAC I/P-FG:2KVAC O/P-FG:0.5KVAC				
	ISOLATION RESISTANCE	I/P-O/P, I/P-FG, O/P-FG:100M Ohms / 500VDC / 25℃/ 70% RH				
	EMC EMISSION	Compliance to EN61000-3-2:2014/EN61000-3-3:2013				
	EMC IMMUNITY	Compliance to EN 55032:2015/EN55035:2017/60950-1				
OTHERS	MTBF	≥187.7K hrs MIL-HDBK-217F(25℃)				
	DIMENSION	230*127*40.5mm (L*W*H)				
	PACKING	1.3Kg; 9pcs/12.7Kg/0.7CUFT				
NOTE	1.All parameters NOT specially mentioned are measured at 230VAC input, rated load and 25℃ of ambient temperature. 2.Ripple & noise are measured at 20MHz of bandwidth by using a 12" twisted pair-wire terminated with a 0.1uf & 47uf parallel capacitor. 3.Tolerance : includes set up tolerance, line ragulation and load regulation. 4.Derating may be needed under low input voltage. Please check the derating curve for more details. 5.The power supply shall be regarded as a part of the components in the system. For all EMC tests, the test samples shall be installed on a metal iron plate with thickness of 1mm, length of 360mm * width of 360mm. The power supply shall be confirmed related to electromagnetic compatibility in combination with the terminal equipment.					

Single group output with PFC function RSP-500

Mechanical Specification

measurement unit : mm

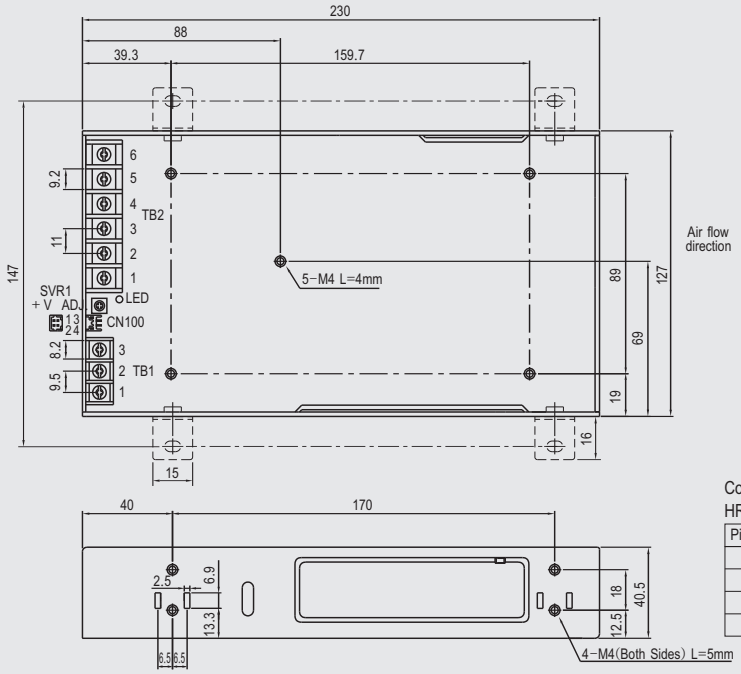

AC Input Terminal
Pin No. Assignment (TB1)

Pin No.	Assignment
1	AC/L
2	AC/N
3	FG ⏚

DC Output Terminal
Pin No. Assignment (TB2)

Pin No.	Assignment
1~3	DC OUTPUT −V
4~6	DC OUTPUT +V

Connector Pin No. Assignment (CN100) :
HRS DF11-04DP-2DS or equivalent

Pin No.	Assignment	Mating Housing	Terminal
1	−S	HRS DF11-4DS or equivalent	HRS DF11-**SC or equivalent
2	+S		
3	RC−		
4	RC+		

Block Diagram

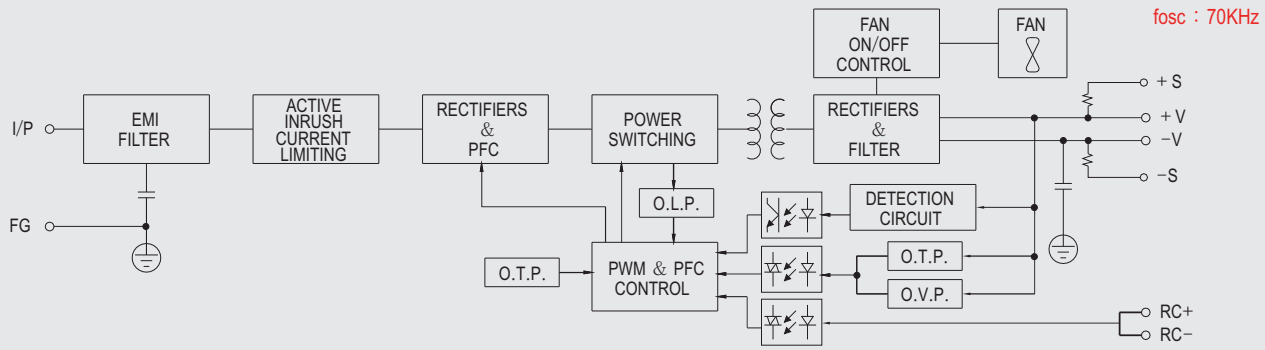

Derating Curve

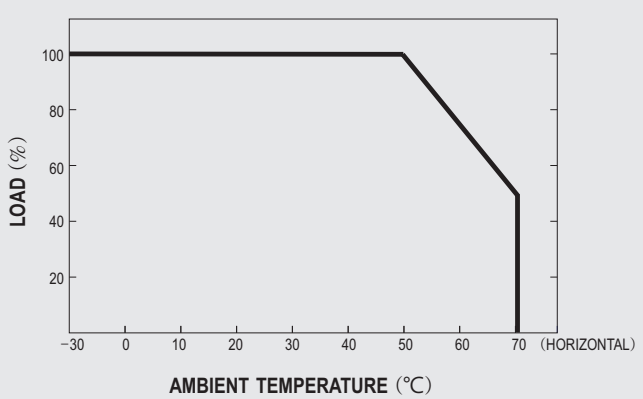

Static Characteristics

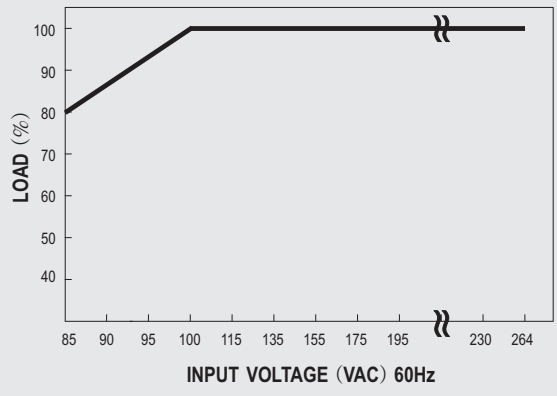

Single group output with PFC function RSP-500

Function Description of CN100

Pin No.	Function	Description
1	−S	Negative sensing. The −S signal should be connected to the negative terminal of the load. The −S and + S leads should be twisted in pair to minimize noise pick−up effect. The maximum line drop compensation is 0.3V.
2	+ S	Positive sensing. The + S signal should be connected to the positive terminal of the load. The + S and −S leads should be twisted in pair to minimize noise pick−up effect. The maximum line drop compensation is 0.3V.
3	RC−	Return for RC+ signal input.
4	RC+	Turns the output on and off by electrical or dry contact between pin 4 (RC+) and pin 3 (RC−). 0~0.8VDC or open: Power ON, 4~10VDC: Power OFF.

Function Manual

1.Remote Control

The PSU can be turned ON/OFF by using the "Remote Control" function.

Between RC−(pin3) and RC+ (pin4) on CN100	PSU Status
SW OFF (0 ~ 0.8VDC) or open	ON
SW ON (4 ~ 10V)	OFF

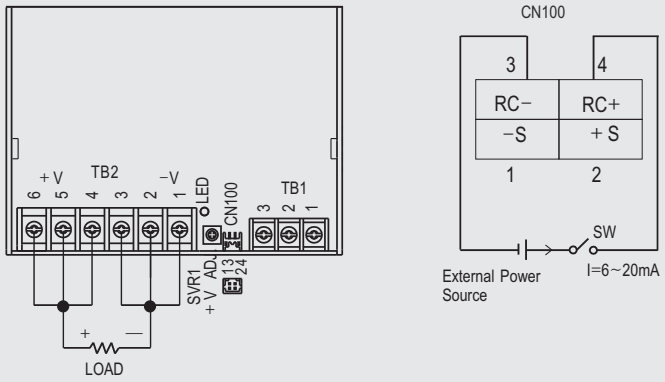

2.Remote Sense

The remote sensing compensates voltage drop on the load wiring up to 0.3V

